APPROVED BY: _____ DATE: _____ PAINT CODE: N0006EA WHITE ELITE SS

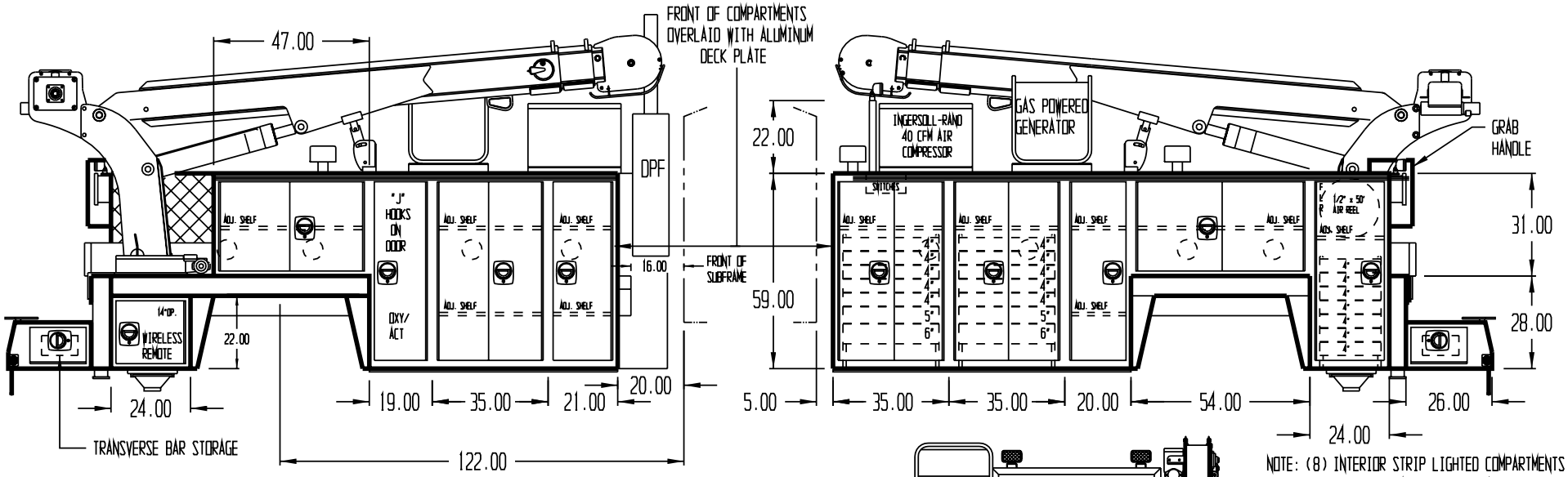

NOTE: (8) INTERIOR STRIP LIGHTED COMPARTMENTS
(5) 36" SS 1, 2, 3 & CS 1, 2
(6) 12" 2ea. SS 4, 5 & CS 4
(2) MAGNETIC REMOTE FLOOD LIGHTS

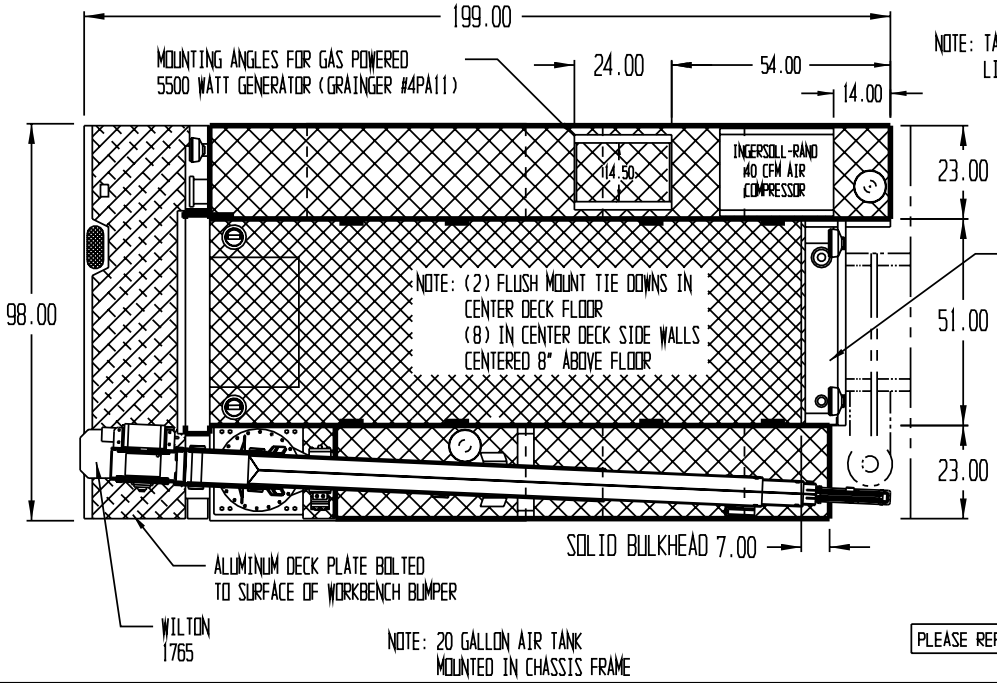

NOTE: TAIL, BACK-UP & MARKER LIGHTS TO BE L.E.D.

NOTE: 20 GALLON AIR TANK MOUNTED IN CHASSIS FRAME

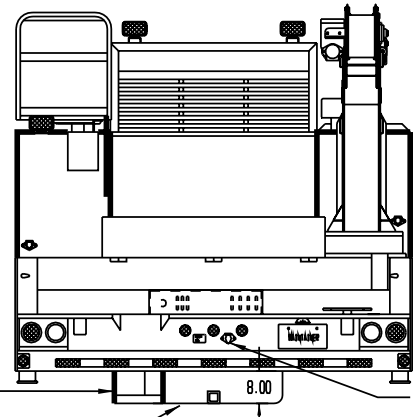

NOTE: PROTECTIVE SPRAY COVERING ON: CARGO CENTER DECK, COMPARTMENT TOPS, SIDES, (NOT BACKS), FRONT BULKHEAD, TAIL GATE, & TAIL GATE EXTENSION, REAR WORK BENCH BUMPER STEP ONLY AND CAB GUARD

HYDRAULIC EXTEND IN/OUT

TRAILER PLUG 7-PRONG ROUND PIN

NOTE: 8" SILLS & 4" X-MEMBERS

NOTE: USABLE CENTER DECK CARGO WIDTH 50.50"

PLEASE REPORT ANY ERRORS FOUND ON THIS PRINT

THIS PRINT CONTAINS CONFIDENTIAL INFORMATION AND IS THE SOLE PROPERTY OF MAINTAINER CORP. OF IOWA INC. AND IS NOT TO BE COPIED OR REPRODUCED WITHOUT THE EXPRESSED WRITTEN PERMISSION OF MAINTAINER CORP. OF IOWA INC.

PROPRIETARY DATA PROPERTY OF MAINTAINER CORPORATION OF IOWA, INC.

COPYRIGHT © 2000

UOS DIMENSIONS ARE IN INCHES
GENERAL TOLERANCES

BREAK ALL EDGES .01 X 45°	ANGULAR ± 1° .XX ± .03 .XXX ± .005
UOS RADII	UOS ANGLES

MADE IN THE USA

MATERIAL:

SCALE: 1:32 SIZE: B

DRAWING NUMBER: Z315-2

12000TT-2-120

Maintainer
Corporation of Iowa, Inc.
P.O. Box 349 1701 S. 2nd Avenue
Sheldon, Iowa 51201

DFTM. KJB DATE: 7/30/08